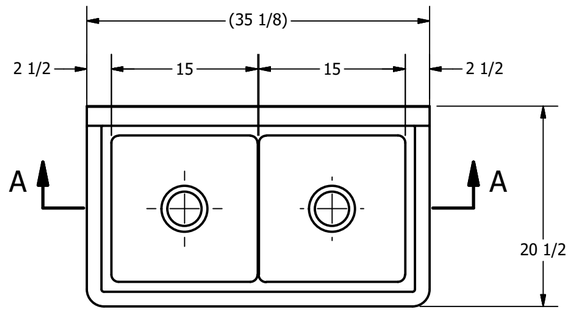


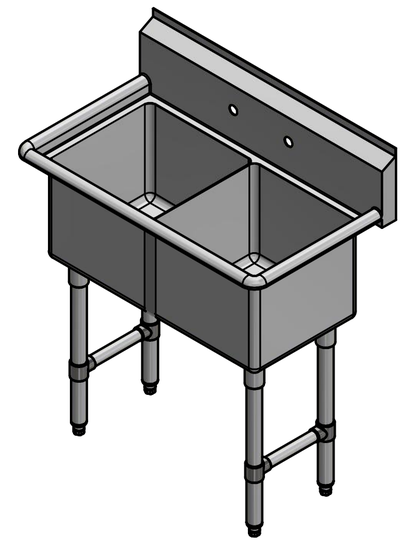

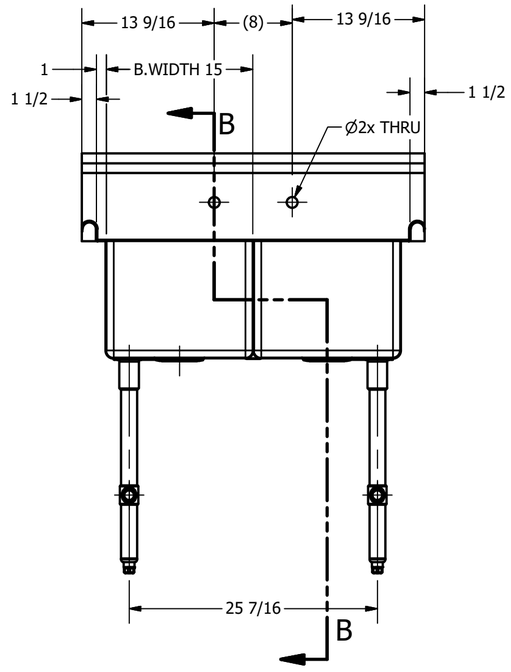


SECTION A-A
SCALE 1 / 12

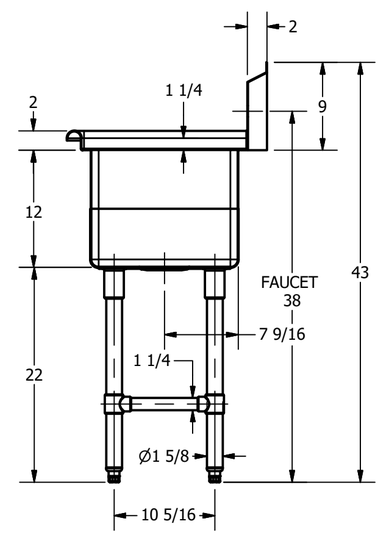


SECTION B-B
SCALE 1 / 12

| REV | DESCRIPTION | DATE | APPROVED |
|---|---|---|---|
| A | | 12/05/17 | |

REVISION HISTORY

griffin PRODUCTS INC.
303 Blue Bird Parkway
Wills Point, Texas 75169
(800) 379-9709 /Fax: (903) 873-6389
www.gpsink.com

THE INFORMATION CONTAINED IN THIS DRAWING IS THE SOLE PROPERTY OF GRIFFIN PRODUCTS, INC. ANY REPORDUCTION IN PART OR AS A WHOLE WITHOUT THE WRITTEN PERMISSION FROM GRIFFIN PRODUCTS, INC. IS PROHIBITED.

| | |
|---|---|
| PART NUMBER | **255.00** |
| PRODUCT CATEGORY | SCULLERY SINK |
| TITLE | PECOS SERIES SCULLERY SINK |
| DESCRIPTION | 16 GA 2 COMPARTMENT SINK WITHOUT L&R DRAINBOARD |
| MATERIAL | 16 GA (0.060 in) 304 STAINLESS STEEL |
| ALL DIMENSIONS ARE IN | X INCHES |
| DRW. BY / DATE | DNZ 2.12.2017 |
| APPROVED BY / DATE | |
| REV. | |
| SCALE | 1 / 12 |
| SIZE | C |
| SHEET | 1 / 1 |